PROBLEMS

1, **2**, **3** = straightforward, intermediate, challenging ☐ = full solution available in Student Solutions Manual/Study Guide = biomedical application

Section 16.1 Potential Difference and Electric Potential

1. A proton moves 2.00 cm parallel to a uniform electric field with $E = 200$ N/C. (a) How much work is done by the field on the proton? (b) What change occurs in the potential energy of the proton? (c) Through what potential difference did the proton move?

2. A uniform electric field of magnitude 250 V/m is directed in the positive x direction. A positive 12-μC charge moves from the origin to the point $(x, y) = (20 \text{ cm}, 50 \text{ cm})$. (a) What is the change in the potential energy of this charge? (b) Through what potential difference does the charge move?

3. A potential difference of 90 mV exists between the inner and outer surfaces of a cell membrane. The inner surface is negative relative to the outer surface. How much work is required to eject a positive sodium ion (Na^+) from the interior of the cell?

4. An ion accelerated through a potential difference of 115 V experiences an increase in kinetic energy of 7.37×10^{-17} J. Calculate the charge on the ion.

5. The difference in potential between the accelerating plates of a TV set is about 25 kV. If the distance between these plates is 1.5 cm, find the magnitude of the uniform electric field in this region.

6. To recharge a 12-V battery, a battery charger must move 3.6×10^5 C of charge from the negative terminal to the positive terminal. How much work is done by the battery charger? Express your answer in joules.

7. A pair of oppositely charged parallel plates are separated by 5.33 mm. A potential difference of 600 V exists between the plates. (a) What is the magnitude of the electric field between the plates? (b) What is the magnitude of the force on an electron between the plates? (c) How much work must be done on the electron to move it to the negative plate if it is initially positioned 2.90 mm from the positive plate?

8. Suppose an electron is released from rest in a uniform electric field whose strength is 5.90×10^3 V/m. (a) Through what potential difference will it have passed after moving 1.00 cm? (b) How fast will the electron be moving after it has traveled 1.00 cm?

9. A 4.00-kg block carrying a charge $Q = 50.0$ μC is connected to a spring for which $k = 100$ N/m. The block lies on a frictionless horizontal track, and the system is immersed in a uniform electric field of magnitude $E = 5.00 \times 10^5$ V/m directed as in Figure P16.9. (a) If the block is released at rest when the spring is unstretched (at $x = 0$), by what maximum amount does the spring expand? (b) What is the equilibrium position of the block?

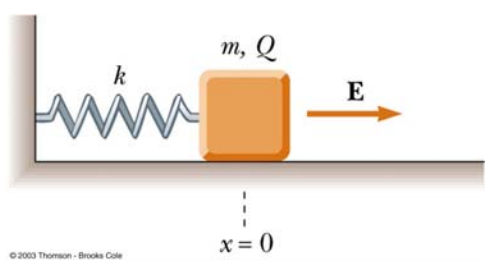

Figure P16.9

10. On planet Tehar, the free-fall acceleration is the same as that on Earth, but there is also a strong downward electric field that is uniform close to the planet's surface. A 2.00-kg ball having a charge of 5.00 μC is thrown upward at a speed of 20.1 m/s, and it hits the ground after an interval of 4.10 s. What is the potential difference between the starting point and the top point of the trajectory?

Section 16.2 Electric Potential and Potential Energy Due to Point Charges

Section 16.3 Potentials and Charged Conductors

Section 16.4 Equipotential Surfaces

11. (a) Find the potential 1.00 cm from a proton. (b) What is the potential difference between two points that are 1.00 cm and 2.00 cm from a proton?

12. Find the potential at point *P* for the rectangular grouping of charges shown in Figure P16.12.

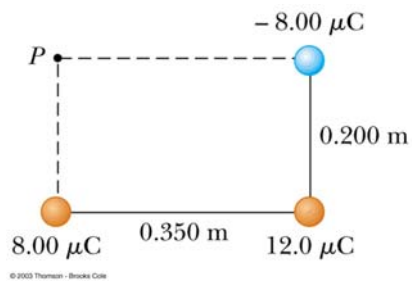

Figure P16.12

13. (a) Find the electric potential, taking zero at infinity, at the upper-right corner (the corner without a charge) of the rectangle in Figure P16.13. (b) Repeat if the 2.00- μC charge is replaced with a charge of –2.00 μC.

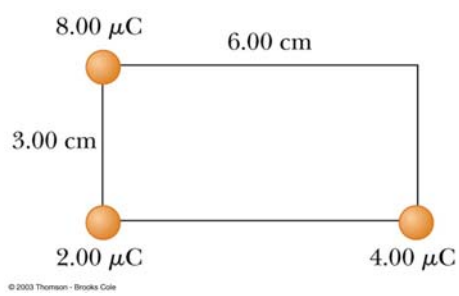

Figure P16.13

14. Three charges are situated at corners of a rectangle as in Figure P16.13. How much energy would be expended in moving the 8.00-μC charge to infinity?

15. Two point charges Q_1 = +5.00 nC and Q_2 = –3.00 nC are separated by 35.0 cm. (a) What is the electric potential at a point midway between the charges? (b) What is the potential energy of the pair of charges? What is the significance of the algebraic sign of your answer?

16. Calculate the speed of (a) an electron that has a kinetic energy of 1.00 eV and (b) a proton that has a kinetic energy of 1.00 eV.

17. The three charges in Figure P16.17 are at the vertices of an isosceles triangle. Calculate the electric potential at the midpoint of the base, taking q = 7.00 nC.

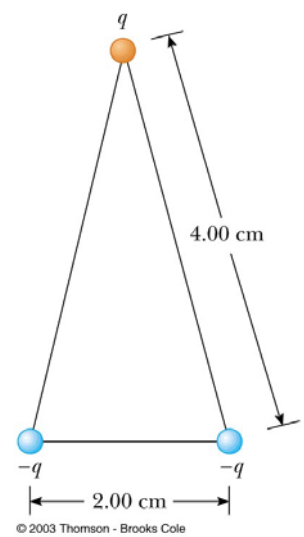

Figure P16.17

18. An electron starts from rest 3.00 cm from the center of a uniformly charged sphere of radius 2.00 cm. If the sphere carries a total charge of 1.00 × 10^{-9} C, how fast will the electron be moving when it reaches the surface of the sphere?

19. In Rutherford's famous scattering experiments (which led to the planetary model of the atom), alpha particles (having charges of +2*e* and masses of 6.64 × 10^{-27} kg) were fired toward a gold nucleus with charge +79*e*. An alpha particle, initially very far from the gold nucleus, is fired at 2.00 × 10^{7} m/s directly toward the gold nucleus as in Figure P16.19. How close does the alpha particle get to the gold nucleus before turning around? Assume the gold nucleus remains stationary.

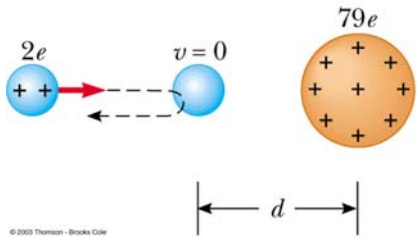

Figure P16.19

20. Starting with the definition of work, prove that at every point on an equipotential surface the surface must be perpendicular to the local electric field.

21. A small spherical object carries a charge of 8.00 nC. At what distance from the center of the object is the potential equal to 100 V? 50.0 V? 25.0 V? Is the spacing of the equipotentials proportional to the change in potential?

Section 16.6 Capacitance

Section 16.7 The Parallel-Plate Capacitor

22. (a) How much charge is on each plate of a 4.00-μF capacitor when it is connected to a 12.0-V battery? (b) If this same capacitor is connected to a 1.50-V battery, what charge is stored?

23. Consider Earth and a cloud layer 800 m above Earth to be the plates of a parallel-plate capacitor. (a) If the cloud layer has an area of $1.0\ \text{km}^2 = 1.0 \times 10^6\ \text{m}^2$, what is the capacitance? (b) If an electric field strength greater than 3.0×10^6 N/C causes the air to break down and conduct charge (lightning), what is the maximum charge the cloud can hold?

24. The potential difference between a pair of oppositely charged parallel plates is 400 V. (a) If the spacing between the plates is doubled without altering the charge on the plates, what is the new potential difference between the plates? (b) If the plate spacing is doubled while the potential difference between the plates is kept constant, what is the ratio of the final charge on one of the plates to the original charge?

25. An air-filled capacitor consists of two parallel plates, each with an area of $7.60\ \text{cm}^2$, separated by a distance of 1.80 mm. If a 20.0-V potential difference is applied to these plates, calculate (a) the electric field between the plates, (b) the capacitance, and (c) the charge on each plate.

26. A 1-megabit computer memory chip contains many 60.0×10^{-15} F capacitors. Each capacitor has a plate area of $21.0 \times 10^{-12}\ \text{m}^2$. Determine the plate separation of such a capacitor (assume a parallel-plate configuration). The diameter of an atom is on the order of 10^{-10} m = 1 Å. Express the plate separation in angstroms.

27. The plates of a parallel-plate capacitor are separated by 0.100 mm. If the material between the plates is air, what plate area is required to provide a capacitance of 2.00 pF?

28. A small object with a mass of 350 mg carries a charge of 30.0 nC and is suspended by a thread between the vertical plates of a parallel-plate capacitor. The plates are separated by 4.00 cm. If the thread makes an angle of 15.0° with the vertical, what is the potential difference between the plates?

Section 16.8 Combinations of Capacitors

29. A series circuit consists of a 0.050-μF capacitor, a 0.100-μF capacitor, and a 400-V battery. Find the charge (a) on each of the capacitors and (b) on each of the capacitors if they are reconnected in parallel across the battery.

30. Three capacitors $C_1 = 5.00$ μF, $C_2 = 4.00$ μF, and $C_3 = 9.00$ μF are connected together. Find the effective capacitance of the group (a) if they are all in parallel, and (b) if they are all in series.

31. (a) Find the equivalent capacitance of the group of capacitors in Figure P16.31. (b) Find the charge on and the potential difference across each.

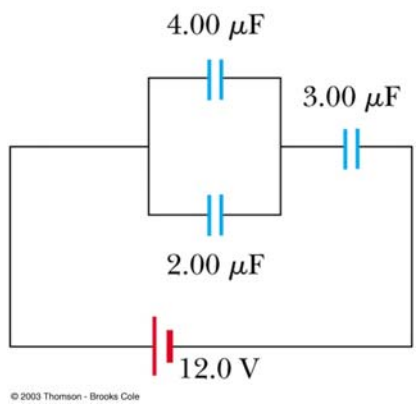

Figure P16.31

32. Two capacitors when connected in parallel give an equivalent capacitance of 9.00 pF and give an equivalent capacitance of 2.00 pF when connected in series. What is the capacitance of each capacitor?

33. Four capacitors are connected as shown in Figure P16.33. (a) Find the equivalent capacitance between points *a* and *b*. (b) Calculate the charge on each capacitor if a 15.0-V battery is connected across points *a* and *b*.

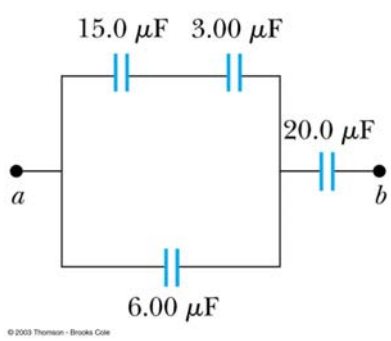

Figure P16.33

34. Consider the combination of capacitors in Figure P16.34. (a) What is the equivalent capacitance of the group? (b) Determine the charge on each capacitor.

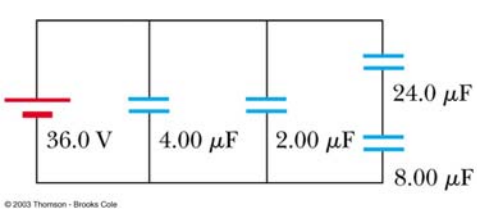

Figure P16.34

35. Find the charge on each of the capacitors in Figure P16.35.

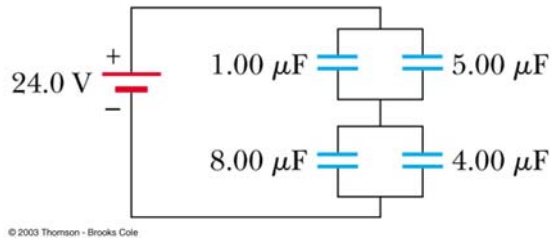

Figure P16.35

36. To repair a power supply for a stereo amplifier, an electronics technician needs a 100-μF capacitor capable of withstanding a potential difference of 90 V between the plates. The only available supply is a box of five 100-μF capacitors, each having a maximum voltage capability of 50 V. Can the technician substitute a combination of these capacitors that has the proper electrical characteristics, and if so, what will be the maximum voltage across any of the capacitors used? (*Hint:* The technician may not have to use all the capacitors in the box.)

37. A 25.0-μF capacitor and a 40.0-μF capacitor are charged by being connected across separate 50.0-V batteries. (a) Determine the resulting charge on each capacitor. (b) The capacitors are then disconnected from their batteries and connected to each other, with each negative plate connected to the other positive plate. What is the final charge of each capacitor, and what is the final potential difference across the 40.0-μF capacitor?

38. A 10.0-μF capacitor is fully charged across a 12.0-V battery. The capacitor is then disconnected from the battery and connected across an initially uncharged capacitor, *C*. The resulting voltage across each capacitor is 3.00 V. What is the capacitance *C*?

39. A 1.00-μF capacitor is first charged by being connected across a 10.0-V battery. It is then disconnected from the battery and connected across an uncharged 2.00-μF capacitor. Determine the resulting charge on each capacitor.

40. Find the equivalent capacitance between points *a* and *b* for the group of capacitors connected as

shown in Figure P16.40 if $C_1 = 5.00\ \mu F$, $C_2 = 10.0\ \mu F$, and $C_3 = 2.00\ \mu F$.

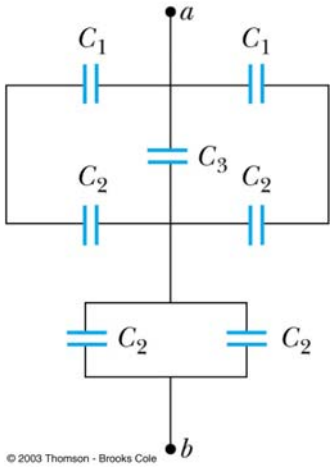

Figure P16.40

41. For the network described in the previous problem if the potential between points *a* and *b* is 60.0 V, what charge is stored on C_3?

42. Find the equivalent capacitance between points *a* and *b* in the combination of capacitors shown in Figure P16.42.

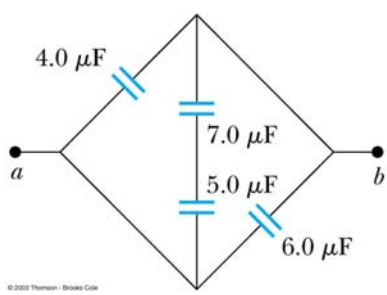

Figure P16.42

Section 16.9 Energy Stored in a Charged Capacitor

43. A parallel-plate capacitor has 2.00-cm^2 plates that are separated by 5.00 mm with air between them. If a 12.0-V battery is connected to this capacitor, how much energy does it store?

44. Two capacitors $C_1 = 25.0\ \mu F$ and $C_2 = 5.00\ \mu F$ are connected in parallel and charged with a 100-V power supply. (a) Calculate the total energy stored in the two capacitors. (b) What potential difference would be required across the same two capacitors connected in *series* in order that the combination store the same energy as in (a)?

45. Consider the parallel-plate capacitor formed by Earth and a cloud layer as described in Problem 16.23. Assume this capacitor will discharge (that is, lightning occurs) when the electric field strength between the plates reaches 3.0×10^6 N/C. What is the energy released if the capacitor discharges completely during a lightning strike?

46. A certain storm cloud has a potential difference of 1.00×10^8 V relative to a tree. If, during a lightning storm, 50.0 C of charge is transferred through this potential difference and 1.00% of the energy is absorbed by the tree, how much water (sap in the tree) initially at 30.0°C can be boiled away? Water has a specific heat of 4 186 J/kg · °C, a boiling point of 100°C, and a heat of vaporization of 2.26×10^6 J/kg.

Section 16.10 Capacitors with Dielectrics

47. A capacitor with air between its plates is charged to 100 V and then disconnected from the battery. When a piece of glass is placed between the plates, the voltage across the capacitor drops to 25 V. What is the dielectric constant of this glass? (Assume the glass completely fills the space between the plates.)

48. Two parallel plates, each of area 2.00 cm^2, are separated by 2.00 mm with purified nonconducting water between them. A voltage of 6.00 V is applied between the plates. Calculate (a) the magnitude of the electric field between the plates, (b) the charge stored on each plate, and (c) the charge stored on each plate if the water is removed and replaced with air.

49. Determine (a) the capacitance and (b) the maximum voltage that can be applied to a Teflon-filled parallel-plate capacitor having a plate area of 175 cm^2 and insulation thickness of 0.040 0 mm.

50. A commercial capacitor is constructed as in Figure 16.23a. This particular capacitor is made from two strips of aluminum separated by a strip of paraffin-coated paper. Each strip of foil and paper is 7.00 cm wide. The foil is 0.004 00 mm

thick, and the paper is 0.025 0 mm thick and has a dielectric constant of 3.70. What length should the strips be if a capacitance of 9.50×10^{-8} F is desired before the capacitor is rolled up? (Use the parallel-plate formula. Adding a second strip of paper and rolling up the capacitor doubles its capacitance by allowing both surfaces of each strip of foil to store charge.)

51. A model of a red blood cell portrays the cell as a spherical capacitor—a positively charged liquid sphere of surface area A, separated by a membrane of thickness t from the surrounding negatively charged fluid. Tiny electrodes introduced into the interior of the cell show a potential difference of 100 mV across the membrane. The membrane's thickness is estimated to be 100 nm and its dielectric constant to be 5.00. (a) If an average red blood cell has a mass of 1.00×10^{-12} kg, estimate the volume of the cell and thus find its surface area. The density of blood is 1 100 kg/m^3. (b) Estimate the capacitance of the cell. (c) Calculate the charge on the surface of the membrane. How many electronic charges does this represent?

ADDITIONAL PROBLEMS

52. Three parallel-plate capacitors are constructed, each having the same plate spacing d, and with C_1 having plate area A_1, C_2 having area A_2, and C_3 having area A_3. Show that the total capacitance C of these three capacitors connected in parallel is the same as a capacitor having plate spacing d and plate area $A = A_1 + A_2 + A_3$.

53. Three parallel-plate capacitors are constructed, each having the same plate area A, and with C_1 having plate spacing d_1, C_2 having plate spacing d_2, and C_3 having plate spacing d_3. Show that the total capacitance C of these three capacitors connected in series is the same as a capacitor of plate area A and with plate spacing $d = d_1 + d_2 + d_3$.

54. Charges of equal magnitude 1.00×10^{-15} C and opposite sign are distributed over the inner and outer surfaces of the cell wall in Figure P16.54. Find the force on the potassium on (K^+) if the ion is (a) 2.70 μm from the center of the cell, (b) 2.92 μm from the center, and (c) 4.00 μm from the center.

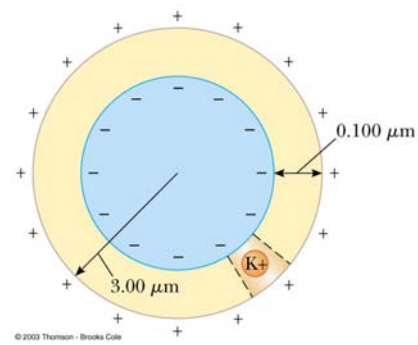

Figure P16.54

55. A virus rests on the bottom plate of oppositely charged parallel plates in the vacuum chamber of an electron microscope. The electric field strength between the plates is 2.00×10^5 N/C, and the bottom plate is negative. If the virus has a mass of 1.00×10^{-15} kg and suddenly acquires a charge of -1.60×10^{-19} C, what are its velocity and position 75.0 ms later? Do not disregard gravity.

56. A plastic pellet has a mass of 7.50×10^{-10} kg and carries a charge of 2.00×10^{-9} C. The pellet is fired horizontally between a pair of oppositely charged parallel plates, as shown in Figure P16.56. If the electric field strength between the plates is 9.20×10^4 N/C and the pellet enters the plates with an initial speed of 150 m/s, determine the deflection angle δ. (*Hint:* This exercise is similar to those involving the motion of a projectile under gravity.)

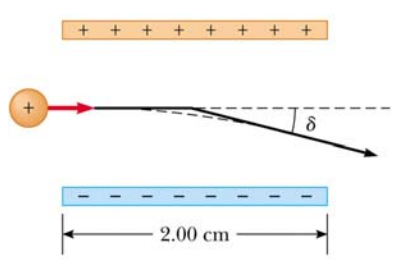

Figure P16.56

57. Find the equivalent capacitance of the group of capacitors in Figure P16.57.

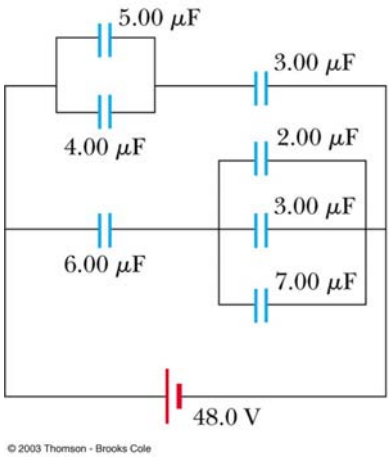

Figure P16.57

58. A spherical capacitor consists of a spherical conducting shell of radius b and charge $-Q$ concentric with a smaller conducting sphere of radius a and charge Q. (a) Find the capacitance of this device. (b) Show that as the radius b of the outer sphere approaches infinity, the capacitance approaches the value of $a/k_e = \pi$™$_0\alpha$

59. The immediate cause of many deaths is ventricular fibrillation, uncoordinated quivering of the heart as opposed to proper beating. An electric shock to the chest can cause momentary paralysis of the heart muscle, after which the heart will sometimes start organized beating again. A *defibrillator* is a device that applies a strong electric shock to the chest over a time of a few milliseconds. The device contains a capacitor of several microfarads, charged to several thousand volts. Electrodes called paddles, about 8 cm across and coated with conducting paste, are held against the chest on both sides of the heart. Their handles are insulated to prevent injury to the operator, who calls, "Clear!" and pushes a button on one paddle to discharge the capacitor through the patient's chest. Assume that an energy of 300 W · s is to be delivered from a 30.0 μF capacitor. To what potential difference must it be charged?

60. When a certain air-filled parallel-plate capacitor is connected across a battery, it acquires a charge (on each plate) of 150 μC. While the battery connection is maintained, a dielectric slab is inserted into and fills the region between the plates. This results in the accumulation of an additional charge of 200 μC on each plate. What is the dielectric constant of the dielectric slab?

61. Capacitors $C_1 = 6.0$ μF and $C_2 = 2.0$ μF are charged as a parallel combination across a 250-V battery. The capacitors are disconnected from the battery and from each other. They are then connected positive plate to negative plate and negative plate to positive plate. Calculate the resulting charge on each capacitor.

62. Capacitors $C_1 = 4.0$ μF and $C_2 = 2.0$ μF are charged as a series combination across a 100-V battery. The two capacitors are disconnected from the battery and from each other. They are then connected positive plate to positive plate and negative plate to negative plate. Calculate the resulting charge on each capacitor.

63. The charge distribution shown in Figure P16.63 is referred to as a linear quadrupole. (a) Show that the electric potential at a point on the x axis where $x > d$ is

$$V = \frac{2k_eQd^2}{x^3 - xd^2}$$

(b) Show that the expression obtained in (a) when $x >> d$ reduces to

$$V = \frac{2k_eQd^2}{x^3}$$

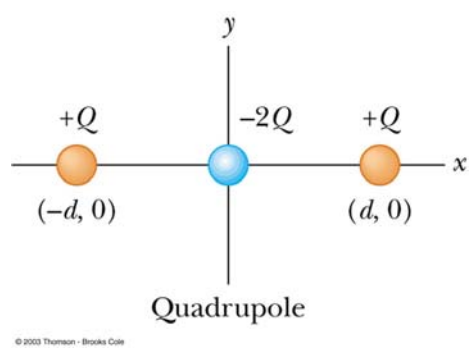

Figure P16.63

64. The energy stored in a 52.0- μF capacitor is used to melt a 6.00-mg sample of lead. To what voltage must the capacitor be initially charged,

assuming that the initial temperature of the lead is 20.0°C? (Lead has a specific heat of 128 J/kg · °C, a melting point of 327.3°C, and a latent heat of fusion of 24.5 kJ/kg.)

65. Consider a parallel-plate capacitor with charge Q and area A, filled with dielectric material having dielectric constant **κ**. It can be shown that the magnitude of the attractive force exerted by each plate on the other is given by $F = Q^2/(2\,\kappa\epsilon_0 A)$. When a potential difference of 100 V exists between the plates of an air-filled 20-μF parallel-plate capacitor, what force does each plate exert on the other if they are separated by 2.0 mm?

66. An electron is fired at a speed of $v_0 = 5.6 \times 10^6$ m/s and at an angle of $\theta_0 = -45°$ between two parallel conducting plates that are $D = 2.0$ mm apart, as in Figure P16.66. If the potential difference between the plates is $\Delta V = 100$ V, determine (a) how close d the electron will get to the bottom plate and (b) where the electron will strike the top plate.

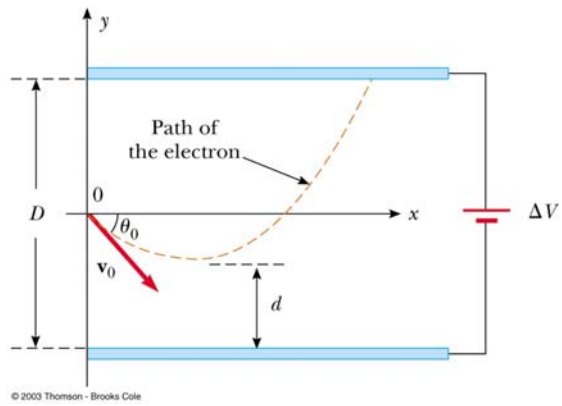

Figure P16.66